KOHLER®

Roughing-In

K-2191, K-2200, K-14223
VESSELS LAVATORY

Product Information

Applicable product:	
Vessels lavatory – above-the-counter	K-2191
Vessels lavatory, glazed underside – above-the-counter or wall-mount	K-2191-G
Vessels lavatory – above-the-counter	K-2200
Vessels lavatory, glazed underside – above-the-counter or wall-mount	K-2200-G
Vessels lavatory – Artist Editions	K-14223
The lavatory is ADA compliant when distance from rim to floor is 34″ (86.4 cm).	ADA

Fixture*:	
Lavatory	
Basin area	15-7/8″ (40.3 cm) D.
Water depth	4-1/4″ (10.8 cm)
Drain hole	1-3/4″ (4.4 cm) D.
* Approximate measurements for comparison only.	

Included components:	
Adjustable linkage	84474
Cut-out template	1002980-7

Installation Notes

Install this product according to the installation guide.

Product does not have an overflow.

Spout must be 5″ (12.7 cm) long (min) for adequate clearance into the lavatory when installed with centerline as shown.

Spout must be tall enough to clear 3″ (7.6 cm) rim height and provide a 1″ (2.5 cm) air gap per ASME A112.1.2

NOTICE: Countertop manufacturer or cutter **must** use the cut-out template provided with the product, or a current one provided by Kohler Co. (call 1-800-4-KOHLER). Kohler Co. is not responsible for cut-out errors when the incorrect cut-out template is used.

Fixture conforms to ASME Standard A112.19.2/CSA B45.1. All dimensions are nominal.

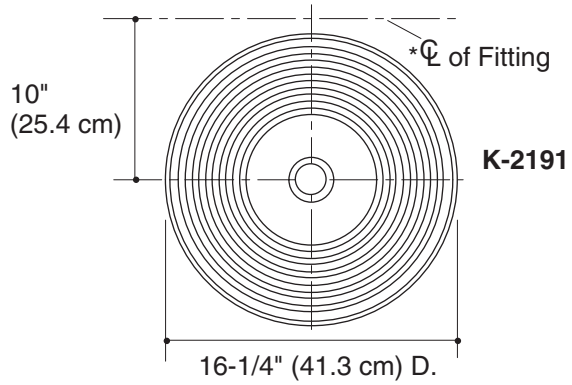

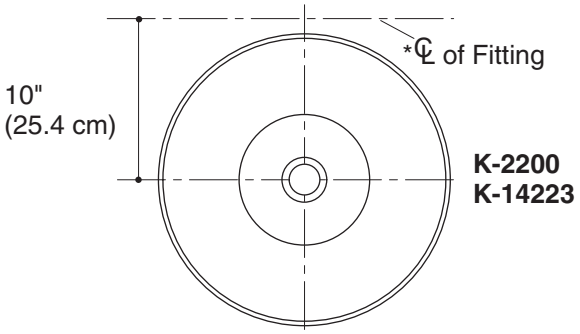

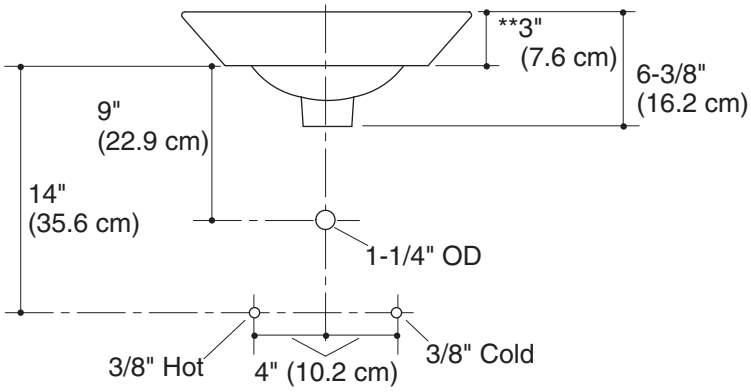

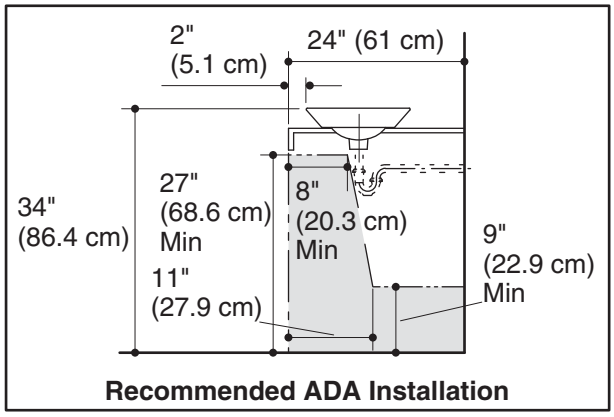

Recommended ADA Installation