ESSENTIAL 1.0 凌彩

SERVICE PARTS PAGE
维修零件图
CABINET
浴室柜
K-38073T-A3A

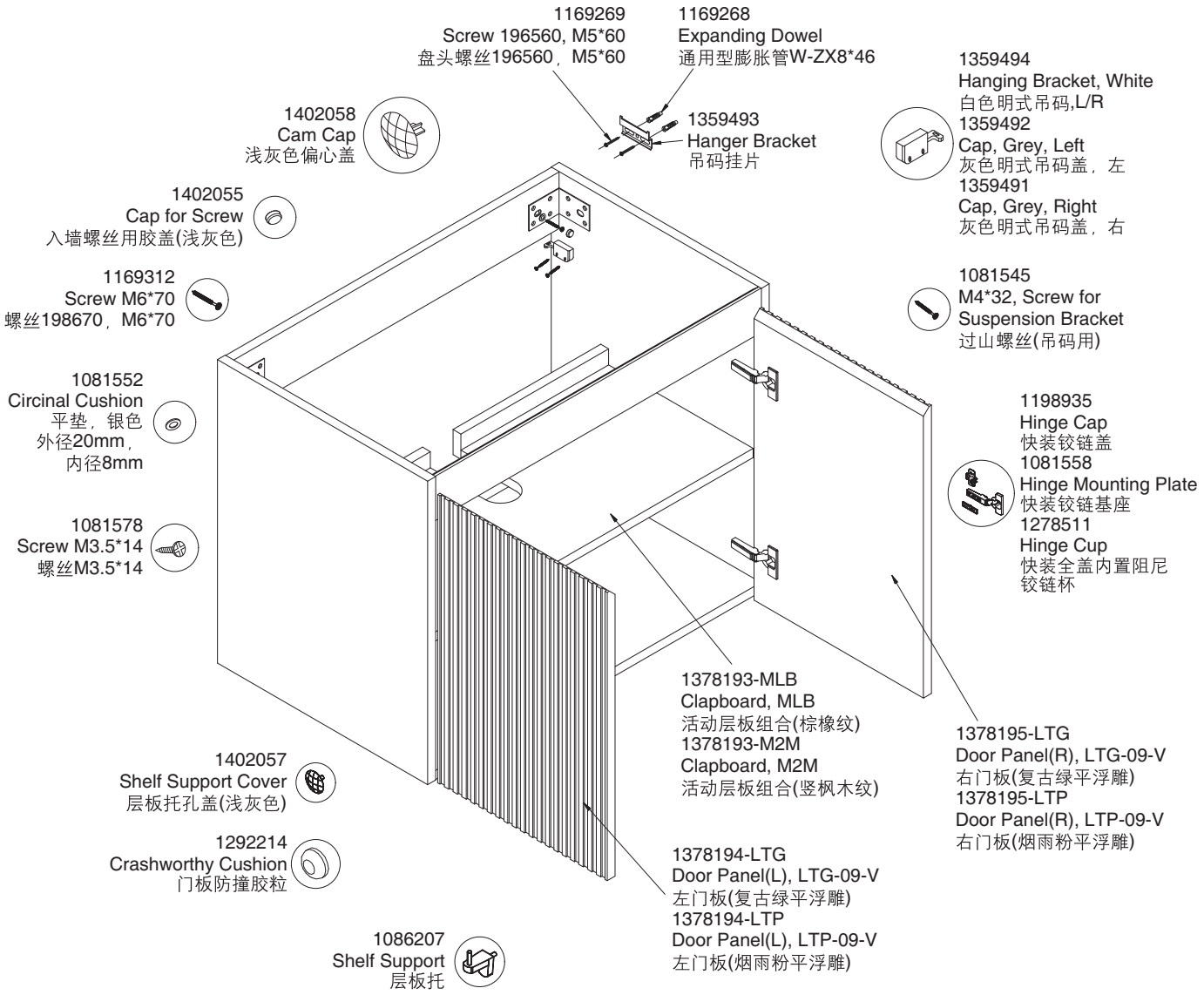

ESSENTIAL 1.0 凌彩

SERVICE PARTS PAGE
维修零件图
CABINET
浴室柜
K-38073T-B26

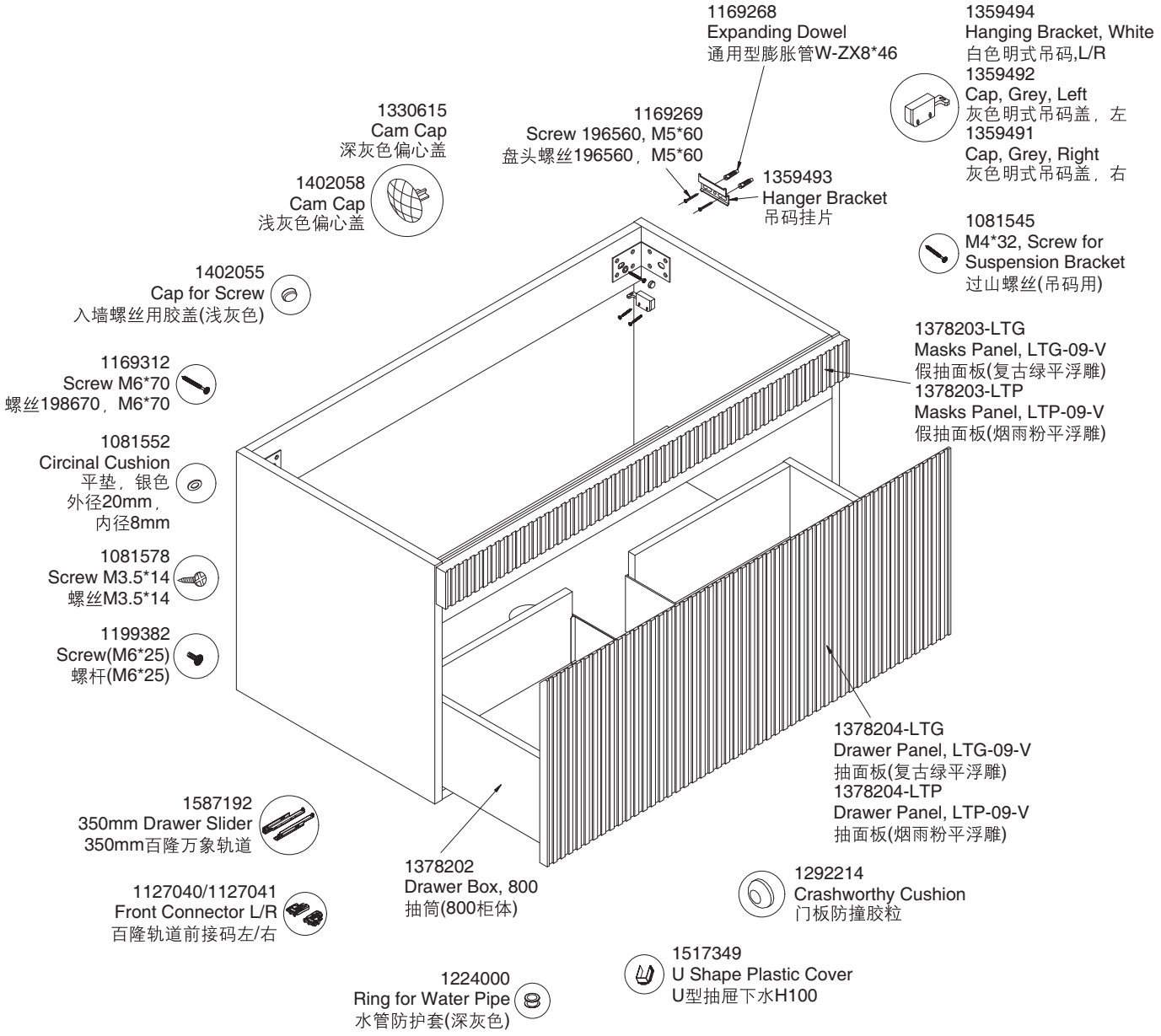

ESSENTIAL 1.0 凌彩

SERVICE PARTS PAGE
维修零件图
CABINET
浴室柜
K-38073T-B4B

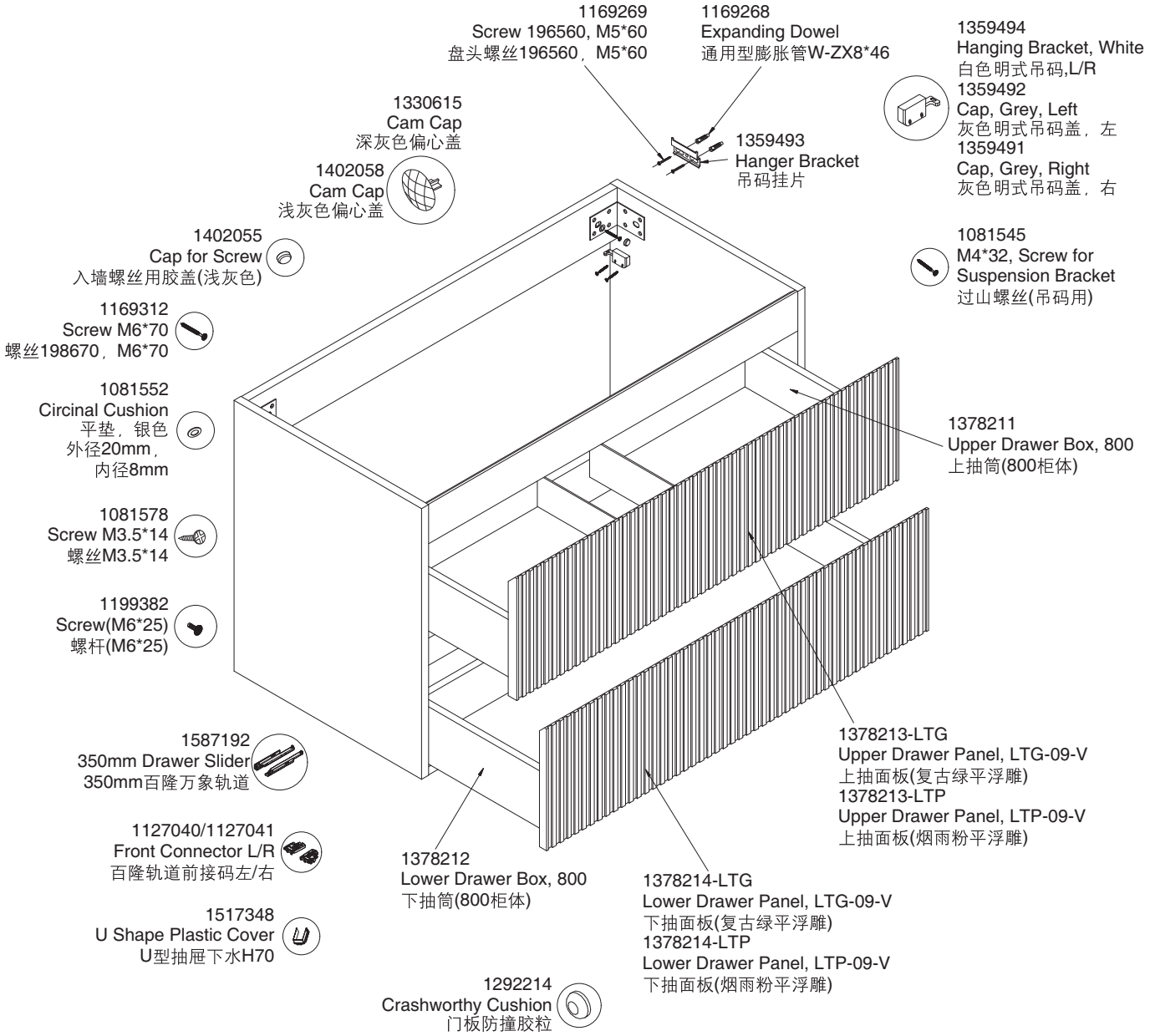

ESSENTIAL 1.0 凌彩

SERVICE PARTS PAGE
维修零件图
CABINET
浴室柜
K-38074T-A3A

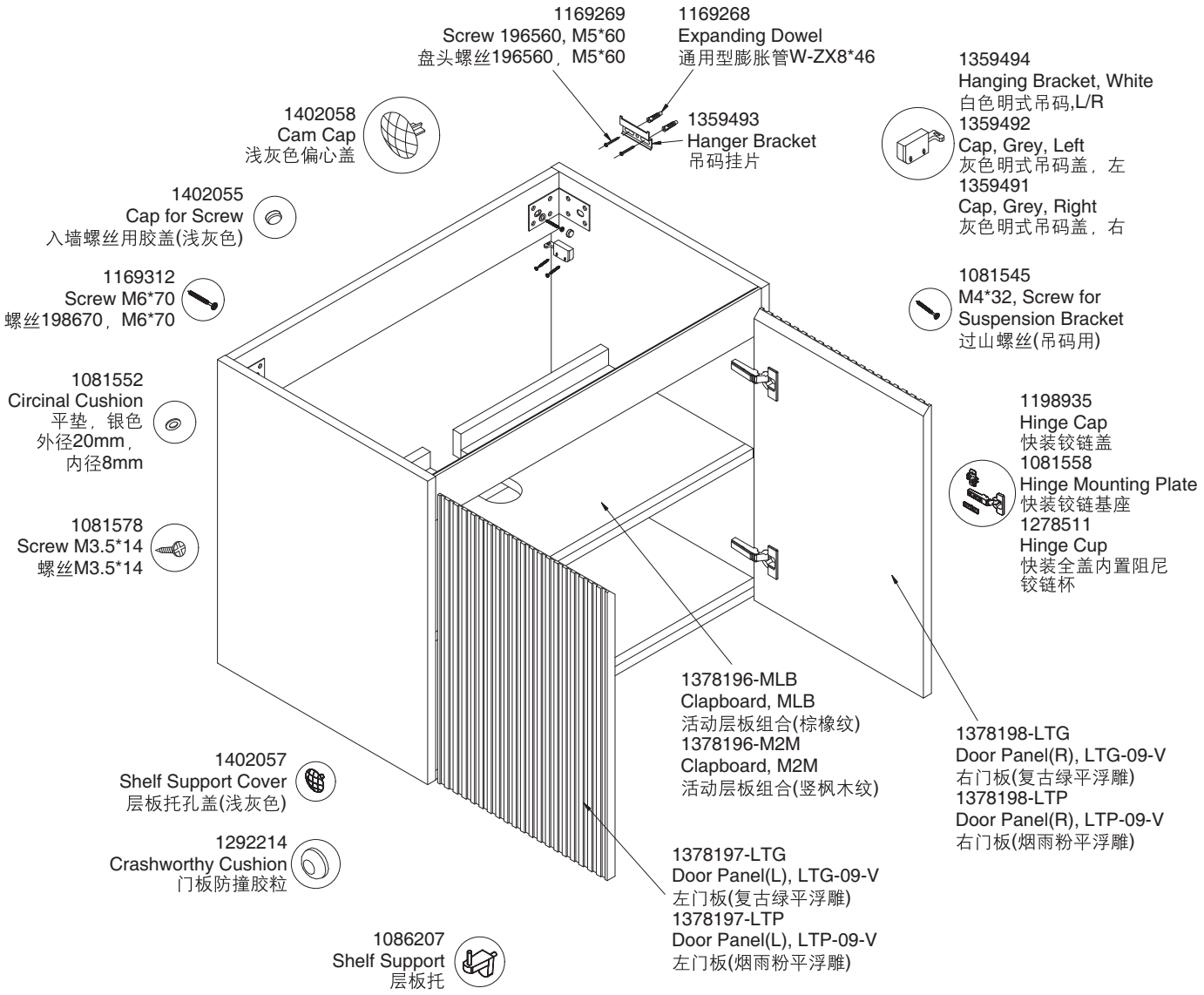

ESSENTIAL 1.0 凌彩

SERVICE PARTS PAGE
维修零件图
CABINET
浴室柜
K-38074T-B26

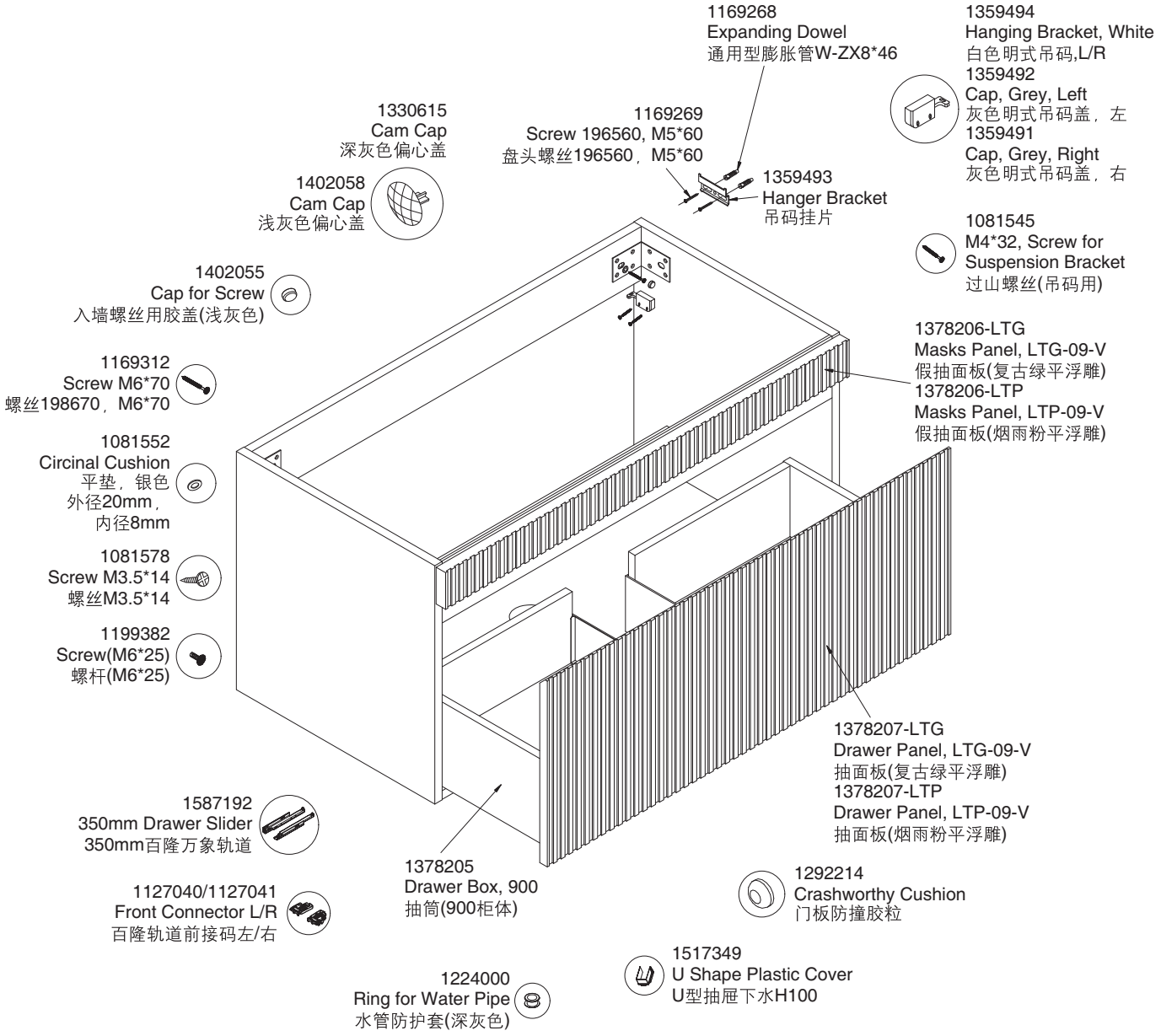

ESSENTIAL 1.0 凌彩

SERVICE PARTS PAGE
维修零件图
CABINET
浴室柜
K-38074T-B4B

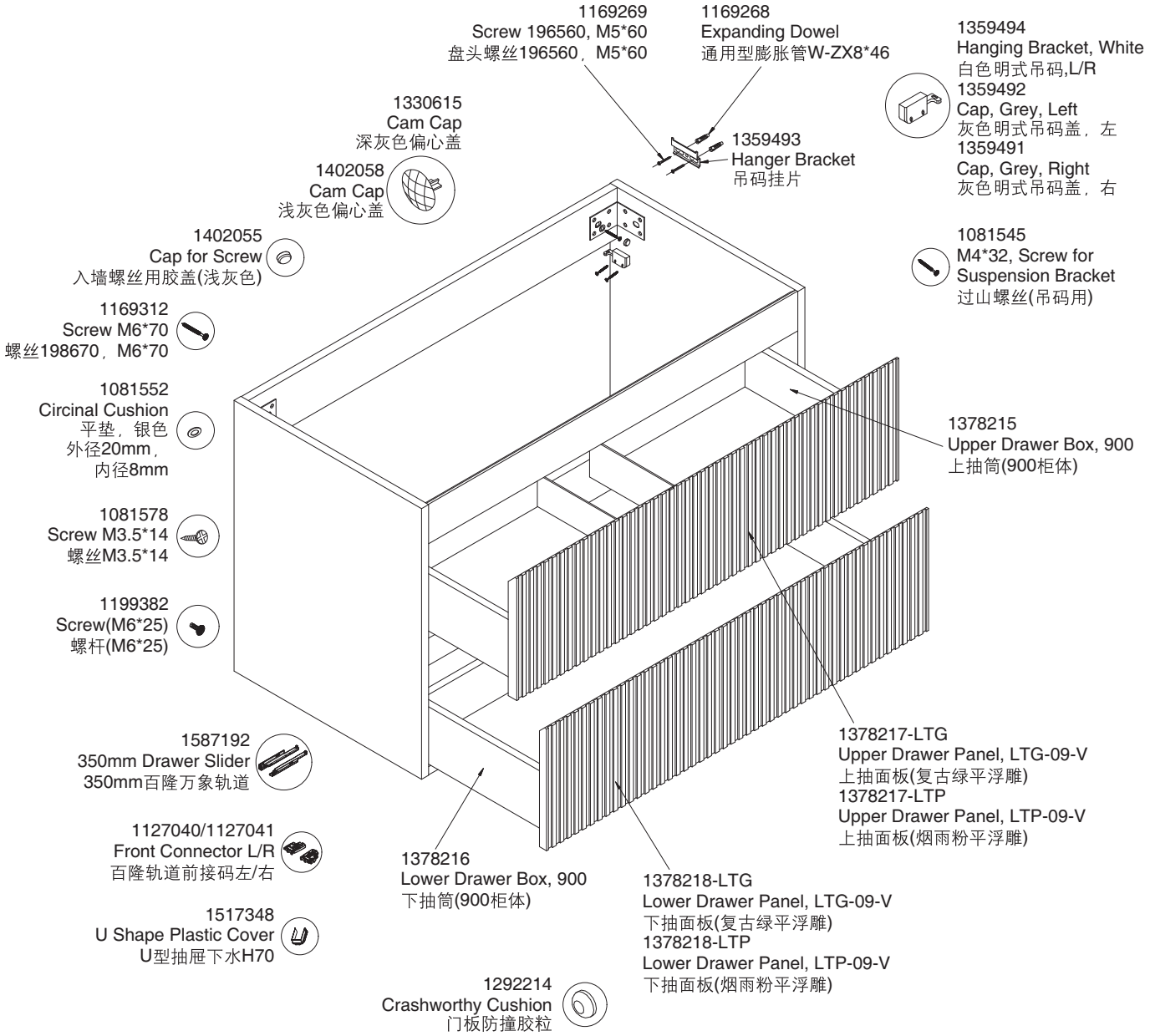

ESSENTIAL 1.0 凌彩

SERVICE PARTS PAGE
维修零件图
CABINET
浴室柜
K-38075T-A3A

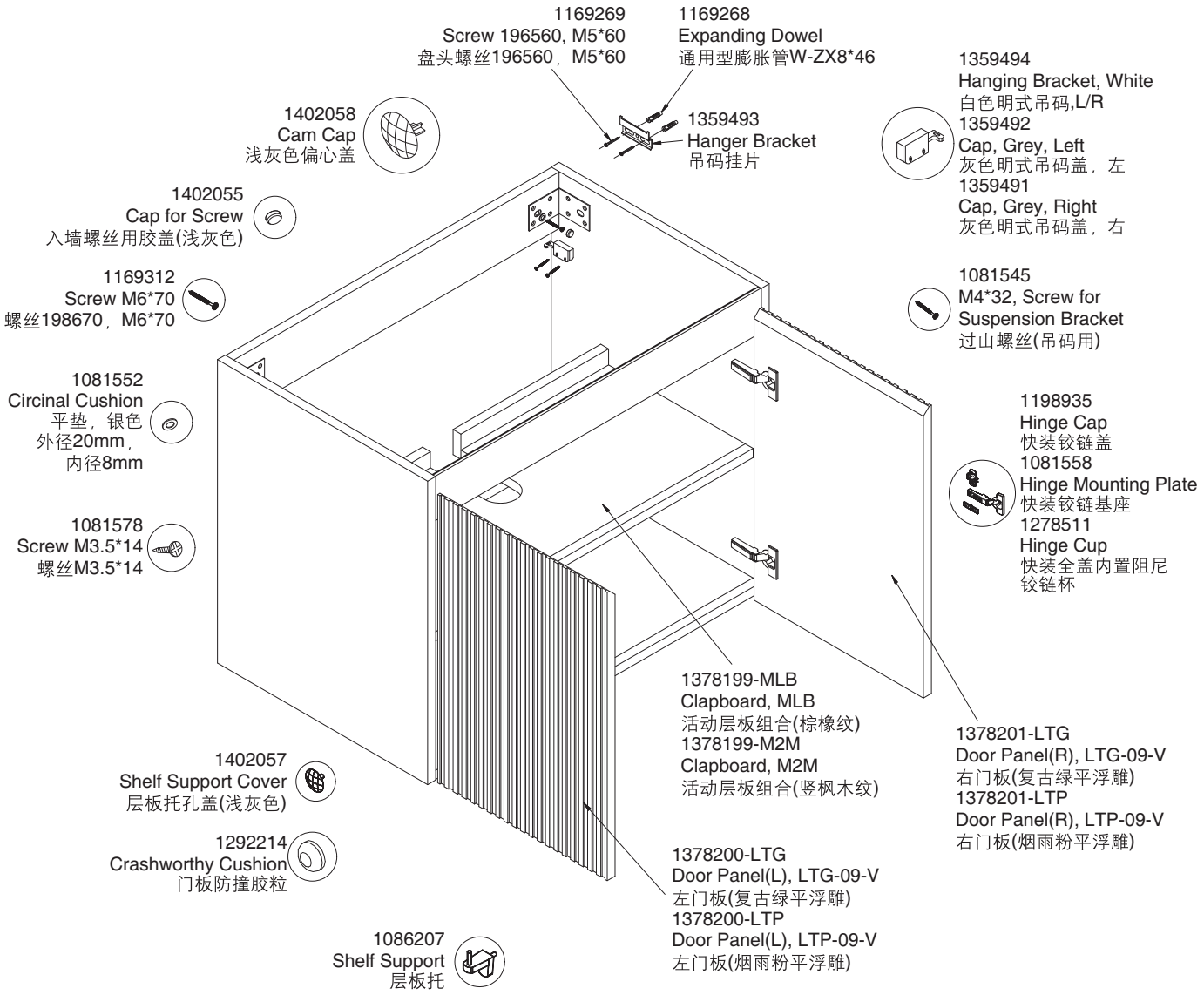

ESSENTIAL 1.0 凌彩

SERVICE PARTS PAGE
维修零件图
CABINET
浴室柜
K-38075T-B26

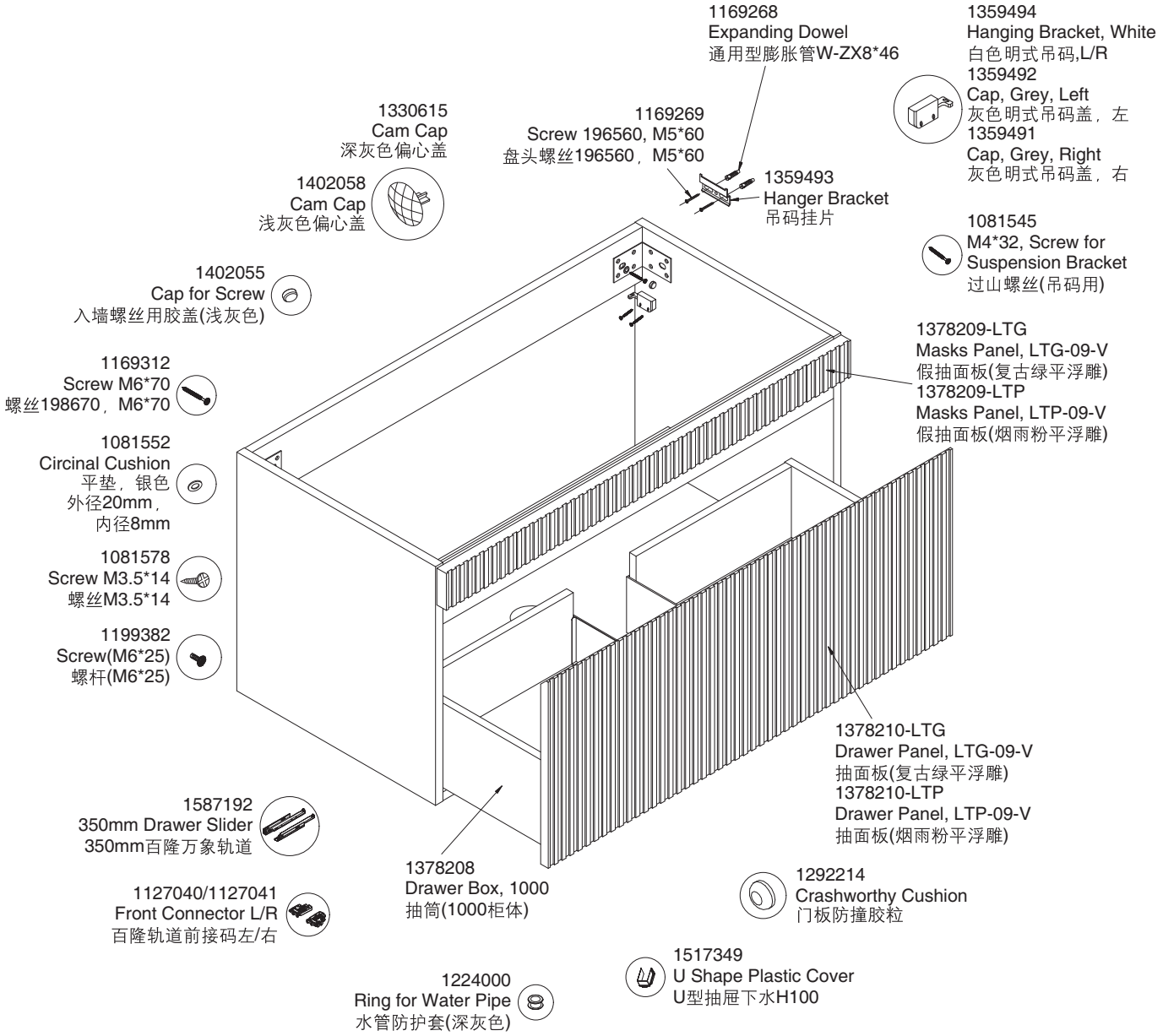

ESSENTIAL 1.0 凌彩
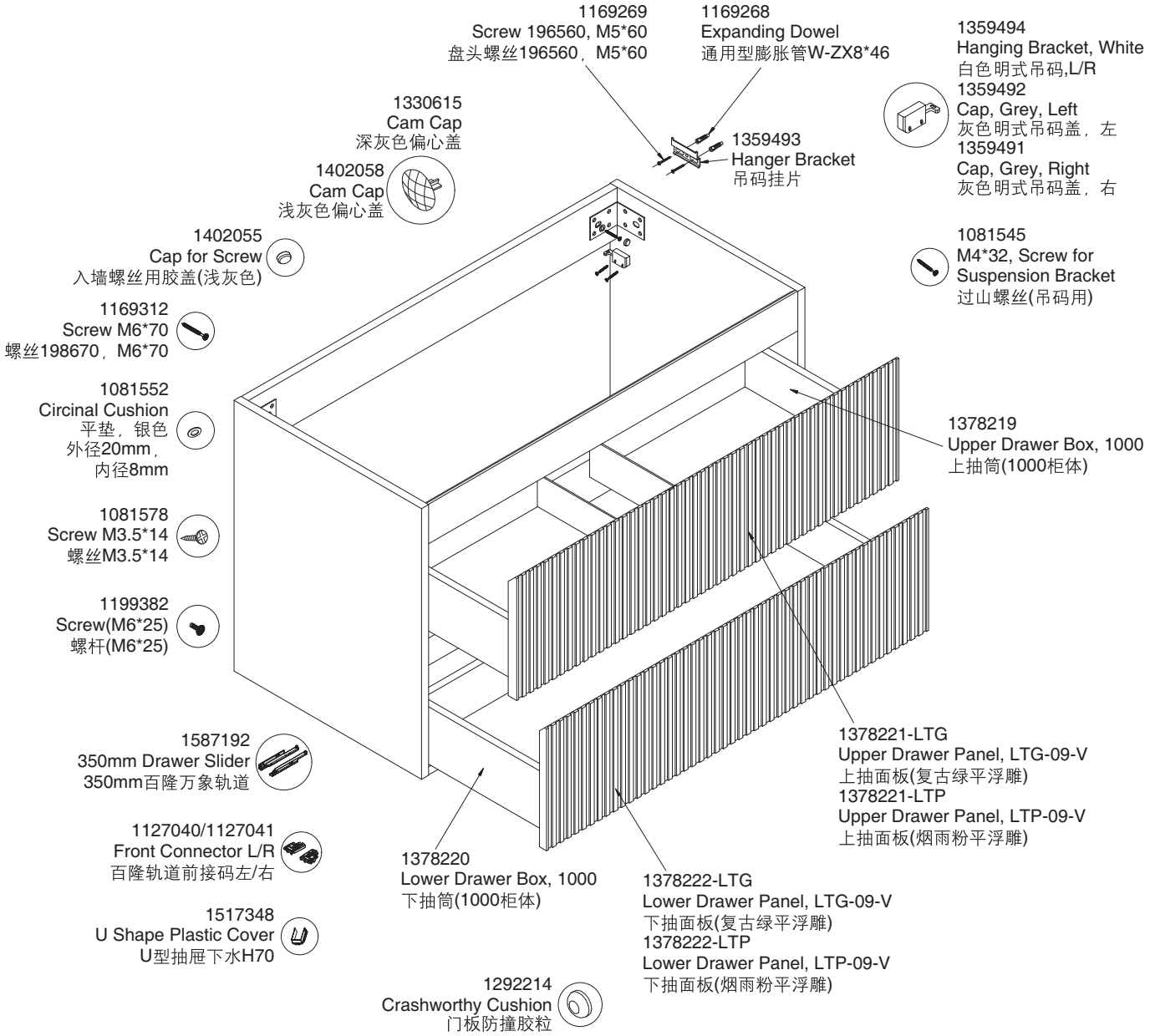
SERVICE PARTS PAGE
维修零件图
CABINET
浴室柜
K-38075T-B4B