SINK W/ DS

SERVICE PARTS PAGE
维修零件图
INTEGRATED SINK APPLIANCE
多功能一体式厨盆
31352T-NA/31354T-NA

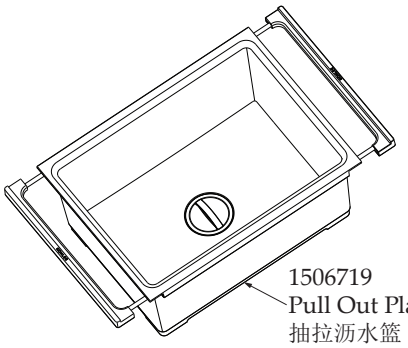

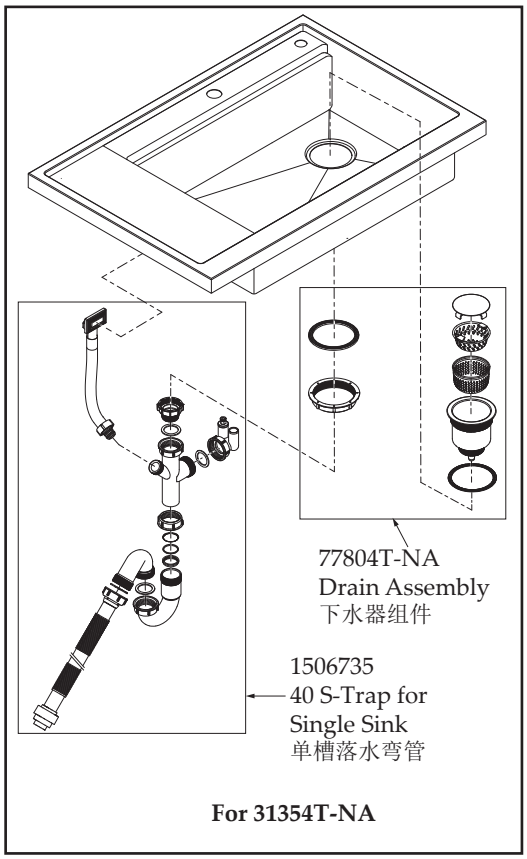

For 31354T-NA

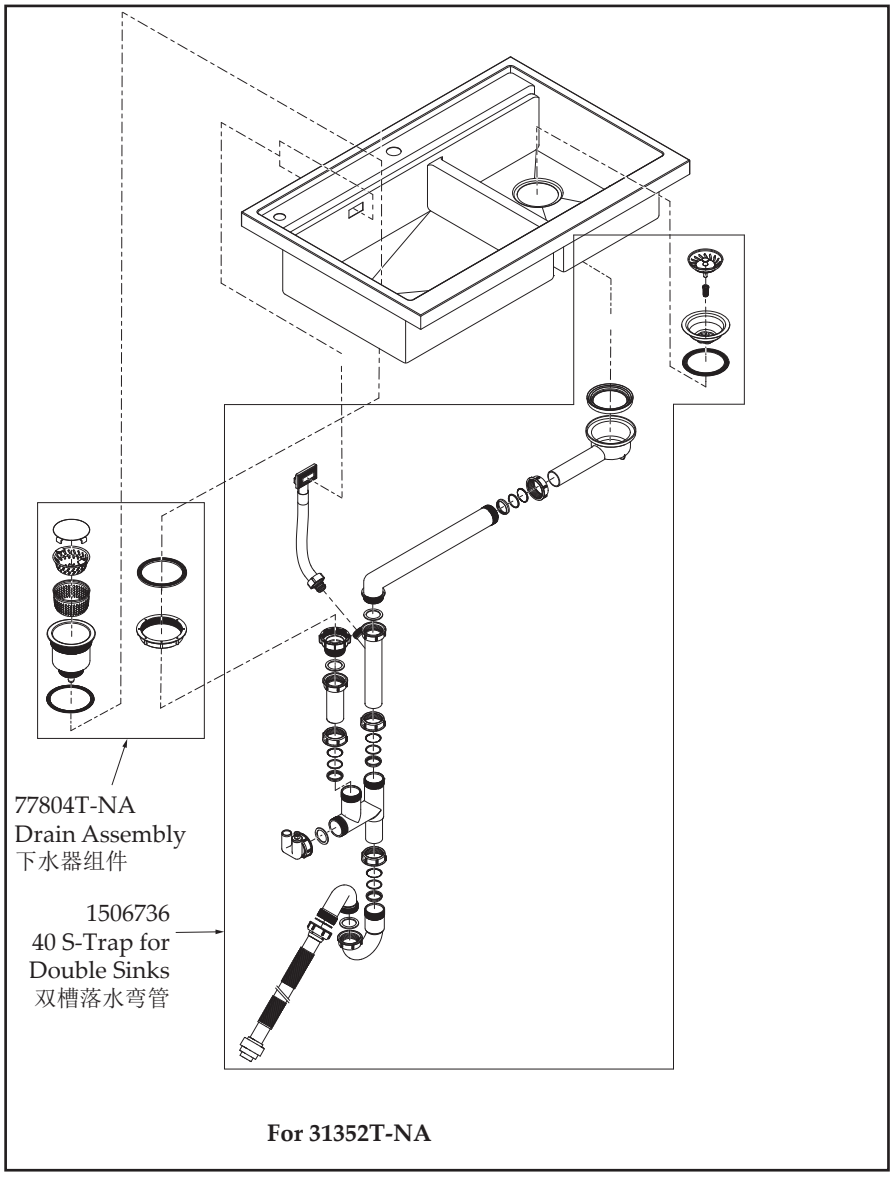

For 31352T-NA

1520489
Skirting Board,YR-P80 / YR-P100
踢脚板,YR-P80哑黑色,80H,0.9米长
1520490
Skirting Board,YR-P100
踢脚板,YR-P100哑黑色,100H,0.9米长

1520488
Faucet Inlet Pipe Extension, 80 cm
80CM龙头进水管延长管